myCNC-ET6 CNC controller

myCNC-ET6 controller specifications	
Number of motor outputs	6
Motor driver outputs	pulse-dir, differential line driver outputs compatible with EIA RS-422 Standard
Maximum pulse frequency	3 MHz
Binary inputs	8x galvanic isolation, PNP/NPN sensor compatible
Binary outputs	2 relay outputs, 2 open collector outputs
PWM outputs	3x - open collector
RS485/RS422	1x RS485 with Modbus ASCII/RTU implementation
Computer connections	Ethernet (PC/ARM, Linux, MS Windows)

Note: The ET8 board is the new updated version of the ET6 controller, which requires unique firmware due to the use of a different chip.

ET6 Top View

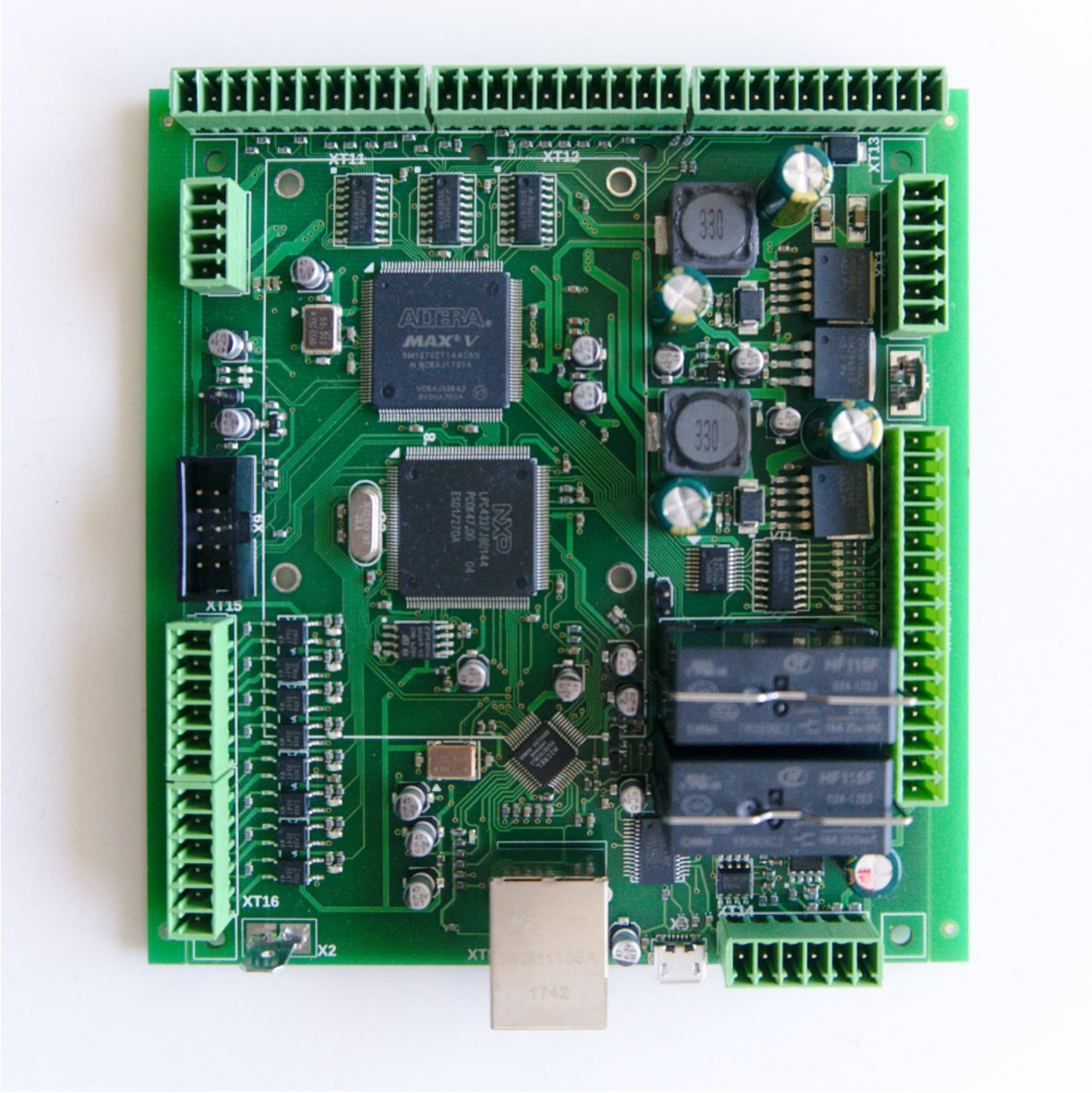

Power supply connection

24V DC is used to supply myCNC-ET6 control board. Power consumption depends on external peripherals you have connected to open collector outputs and +12V/+5V outputs. Normally power supply 24V/2A should be enough to power up the controller based kit with single board computer and 15'6“ TFT screen. However, step-down converters on the ET6 board consume start current about 1.5A and 24V/1A power supply might be not enough to supply the single ET6 board.

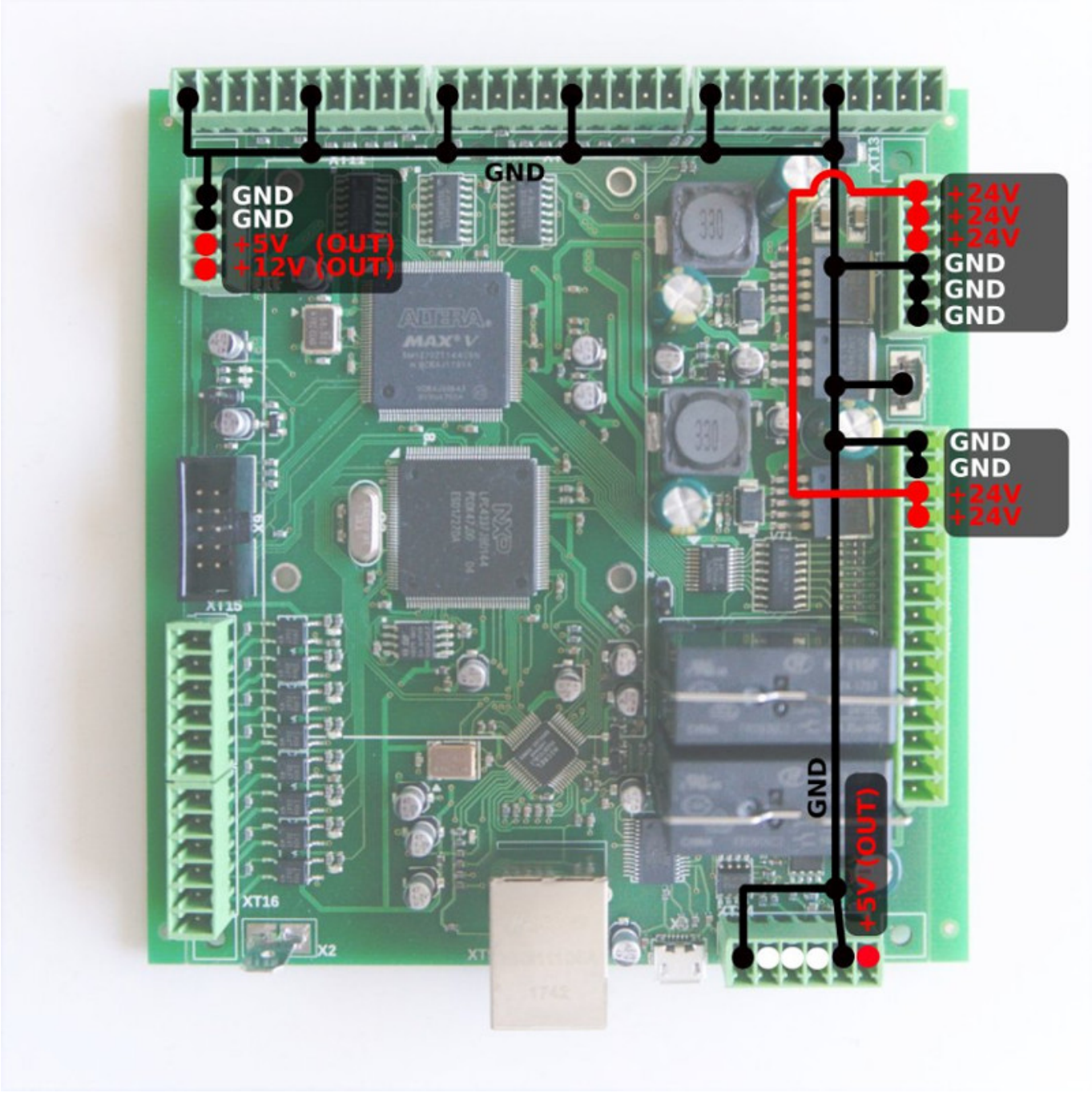

Pulse-Dir outputs

ET6 has 6 channel pulse/dir outputs, 3MHz max pulses frequency.

ET6 pulse dir outputs conforms RS422 standard and compatible with most of servo and stepper drivers (line driver with paraphase signals positive and negative polarity). Internal schematic for pulse-dir is shown on a picture below.

Pulse-dir schematic

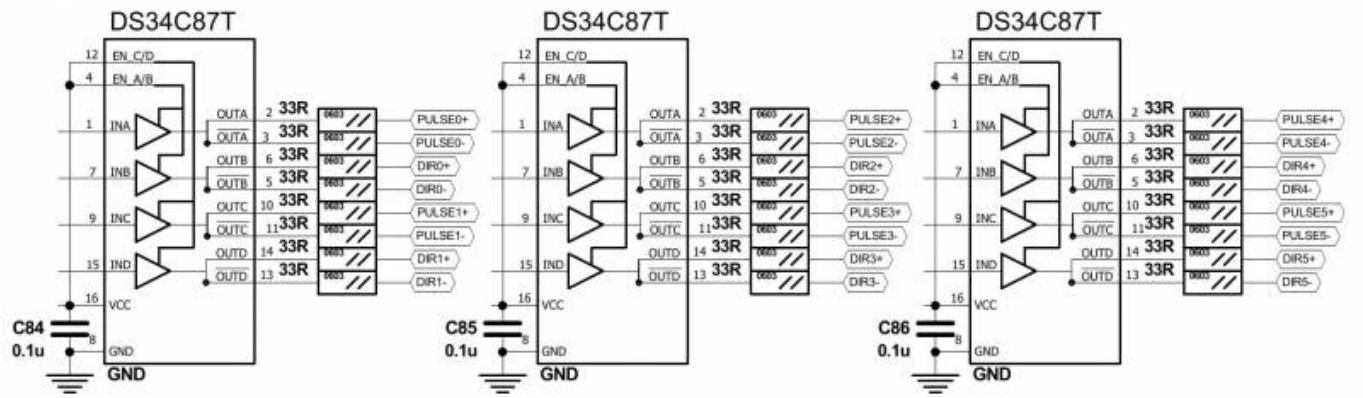

Pulse-Dir connectors pinout shown below

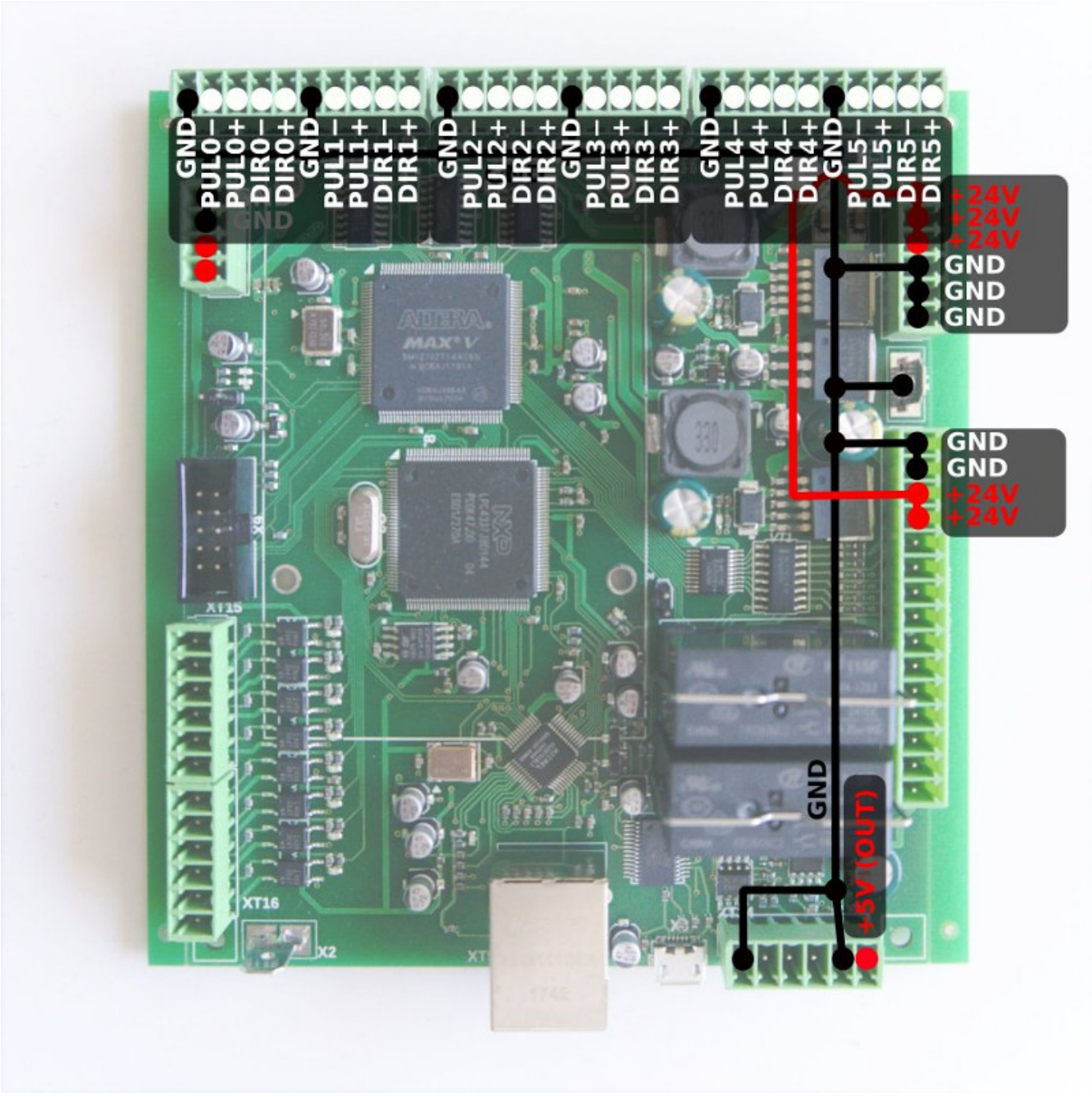

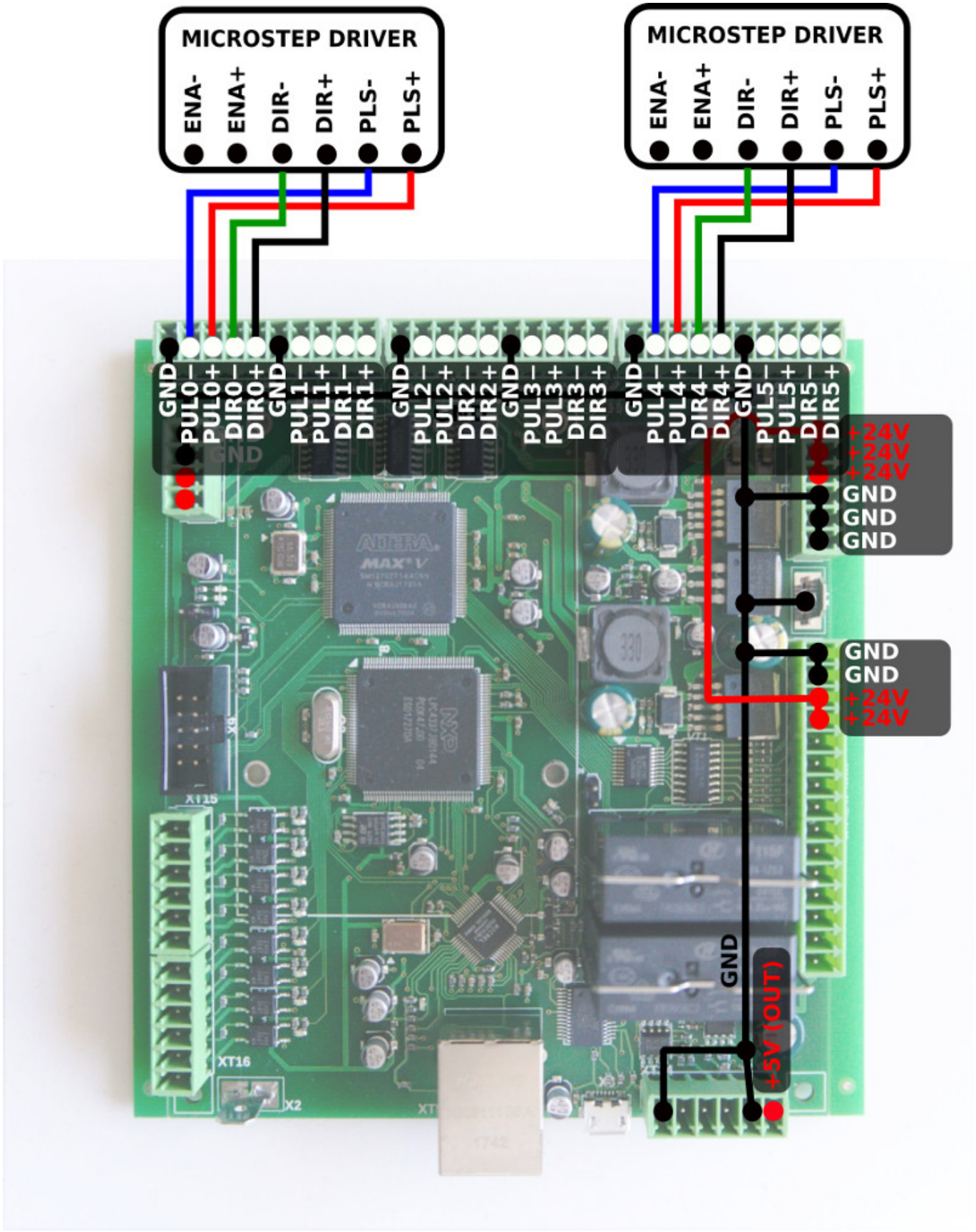

ET6 Output pins

ET6 board contains 7 output pins-

- 2 relay outputs (OUT#0, OUT#1)

- 2 open collector outputs (OUT#2, OUT#3)
- 3 PWM outputs (PWM#1, PWM#2, PWM#3)

```
WARNING: ET6 board rev.1 has Output pin names printed on Bottom side of the board.
This names are NOT correct and differ from actual output addresses.
Please check table below to find out actual output addresses
```

SILK print	Actual Output Pin Address
OUT0	OUT2
OUT1	OUT3
OUT2	PWM1
OUT3	PWM2
OUT4	PWM3
P2A	OUT0 (A)
P2B	OUT0 (B)
P2C	OUT0 (C)
P1A	OUT1 (A)
P1B	OUT1 (B)
P1C	OUT1 (C)

Schematic for ET6 outputs is shown below

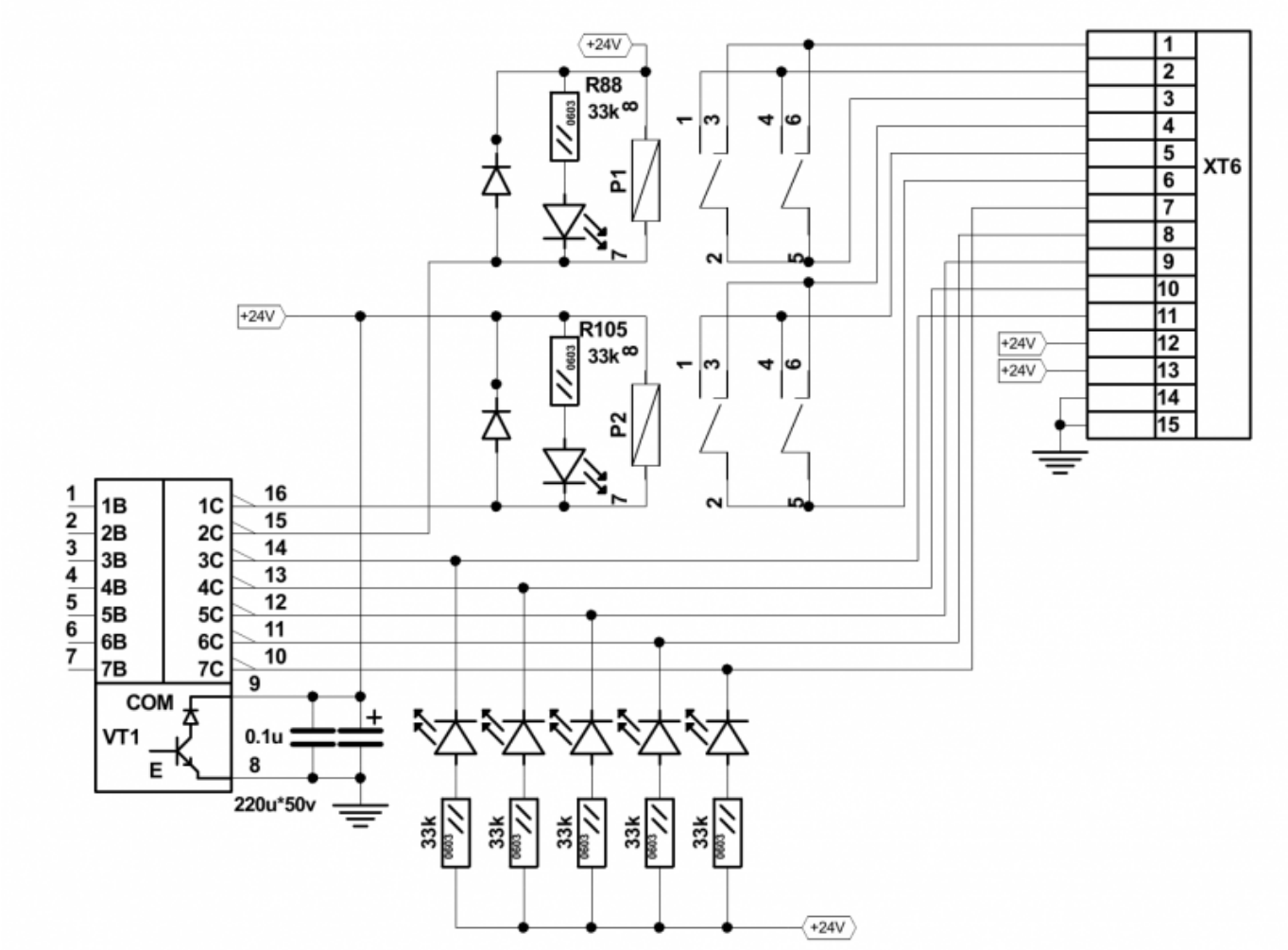

Connector pinouts for ET6 outputs pin shown on a picture below

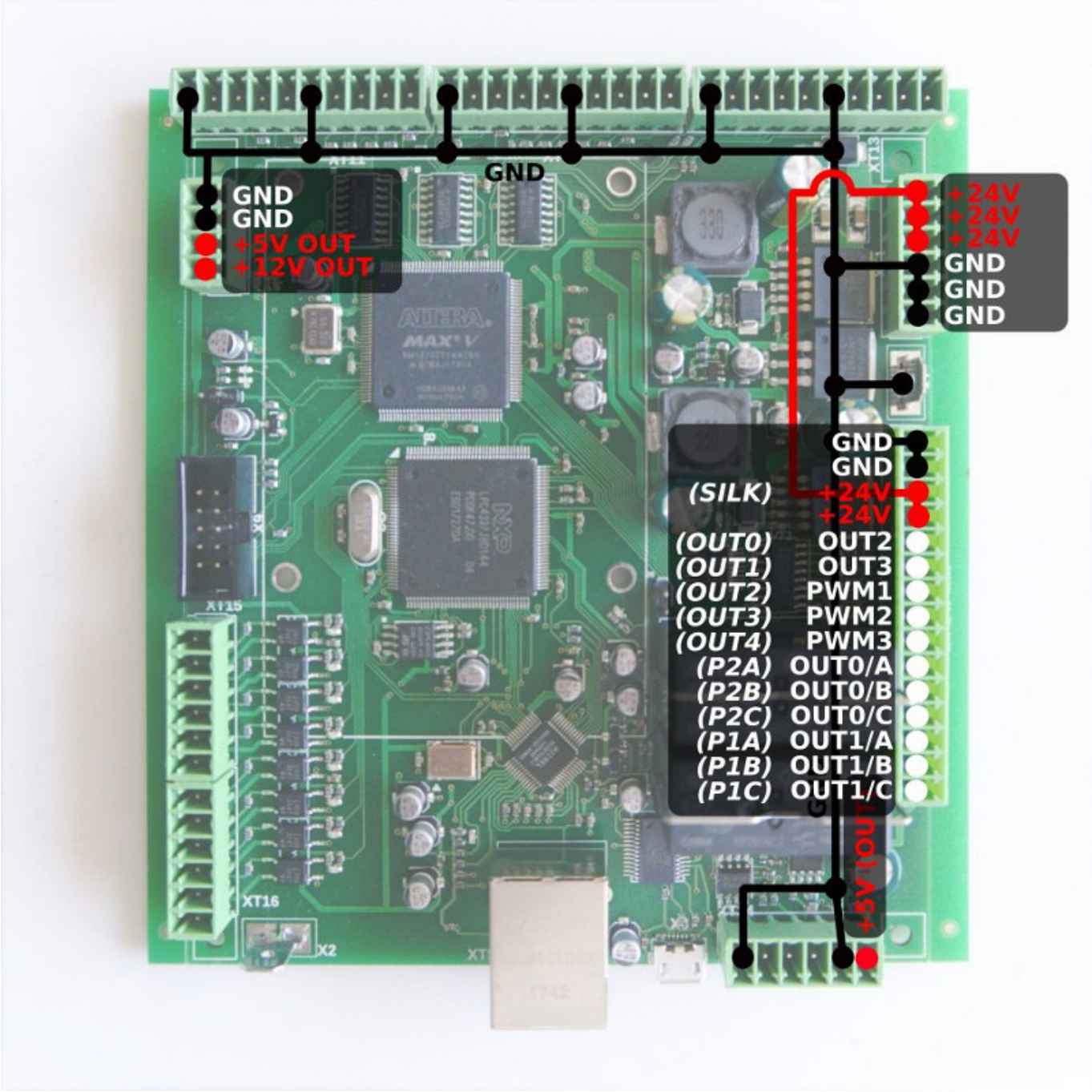

Galvanic isolated inputs

ET6 control board has 8 galvanic isolated binary inputs, 2 groups of 4 inputs each. Each group has two separate power supply pins so inputs can be powered from different power sources for the convenience of the user. Using PNP and NPN sensors simultaneously is possible too.

Schematic for ET6 inputs is shown below

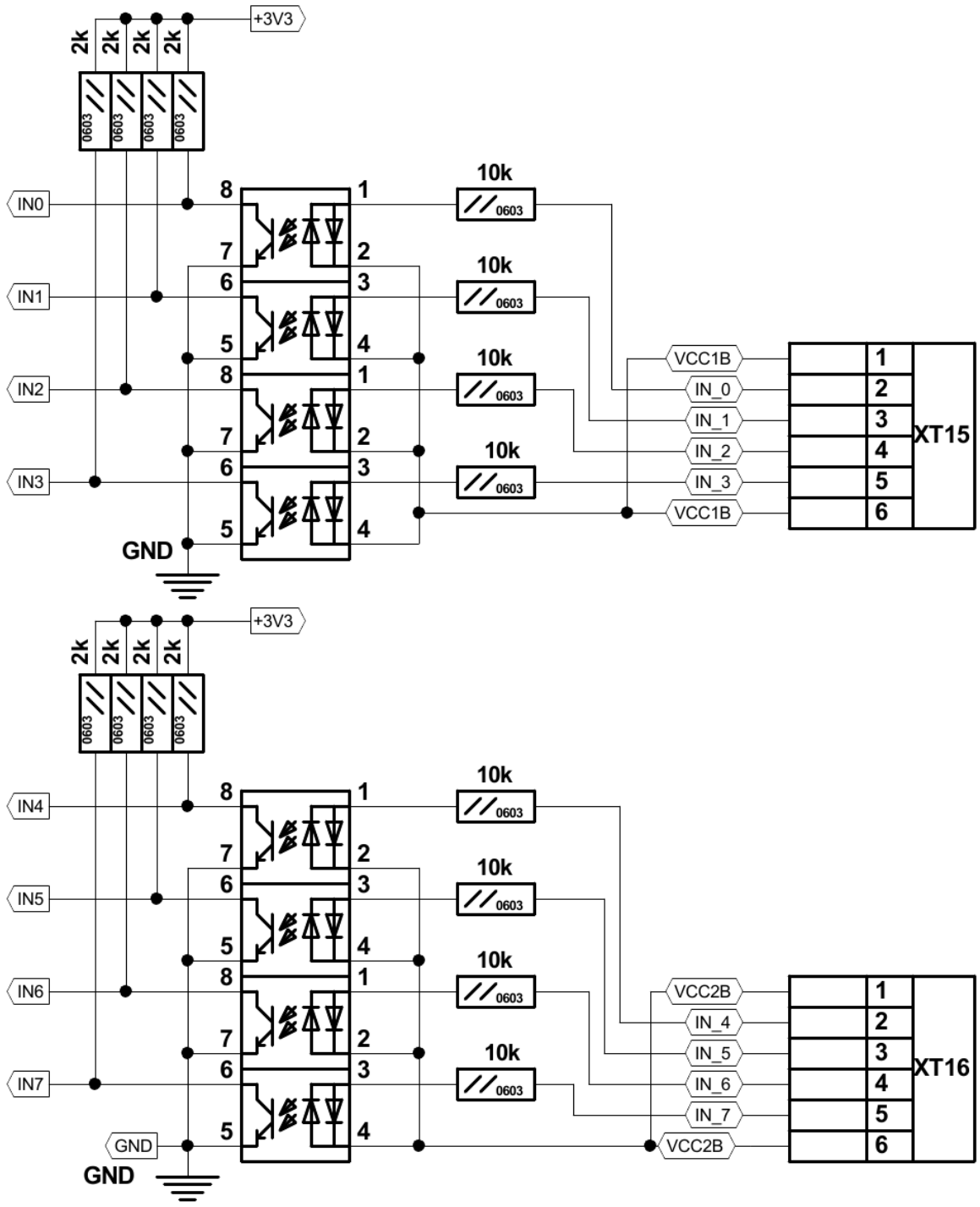

Connector pinouts for ET6 galvanic isolated inputs shown on a picture below

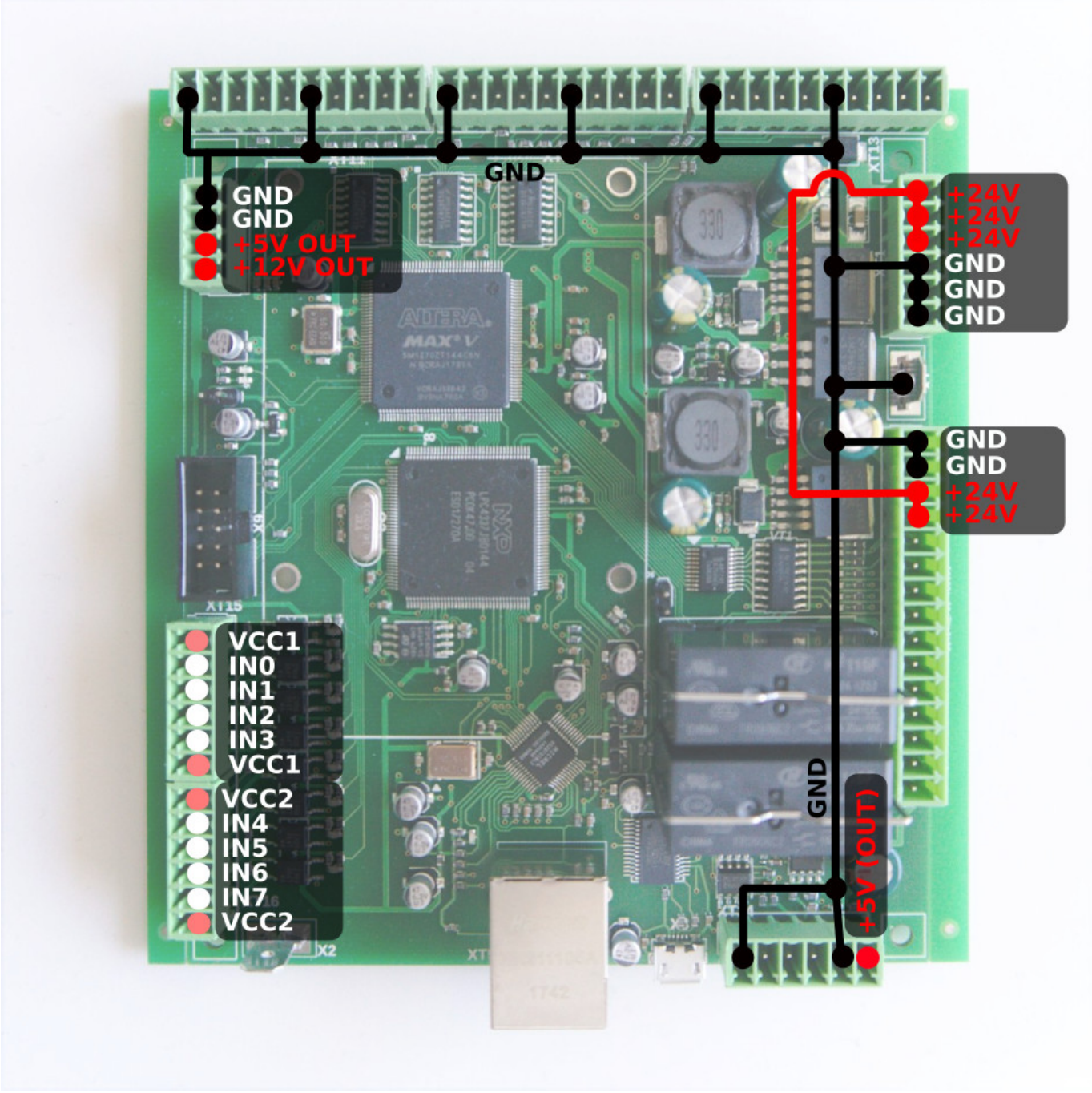

RS422/RS485 Bus

myCNC-ET6 control board has RS485 bus connector. Modbus ASCII/RTU and Hypertherm Serial communication interfaces are implemented in myCNC-ET6 control board.

RS485 bus schematic is shown below:

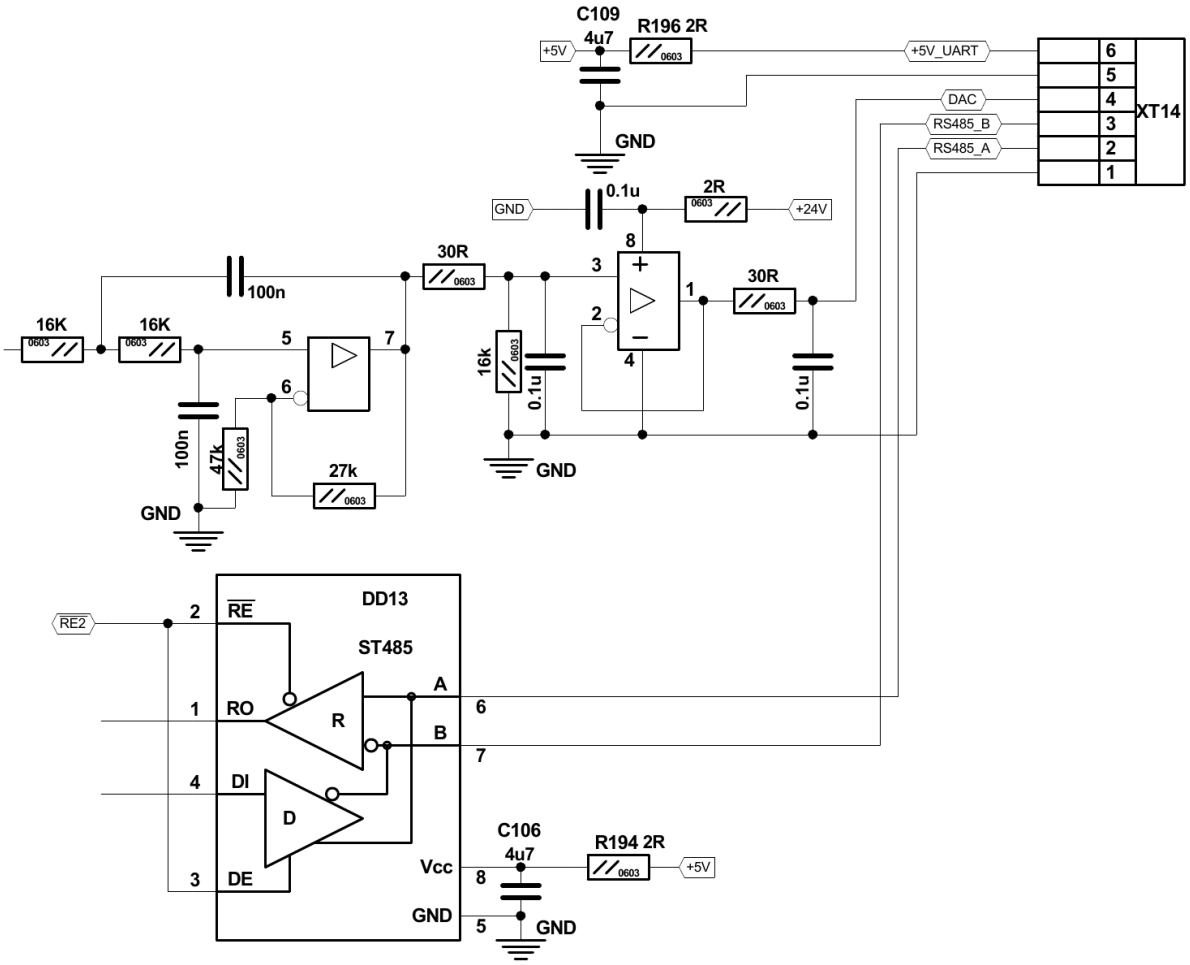

RS485 connector pinout shown below:

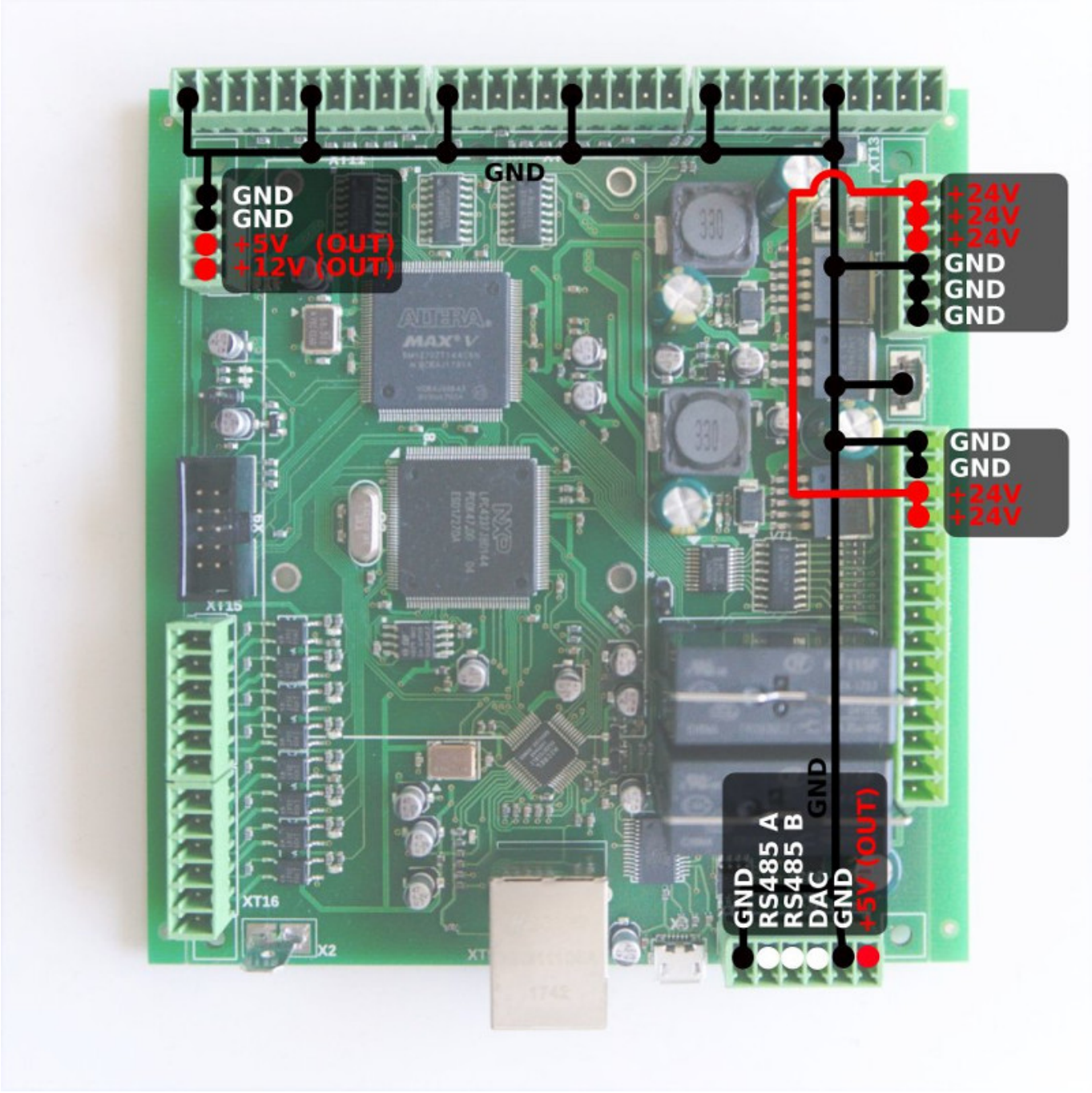

DAC output

myCNC-ET6 control board has DAC output for spindle speed control. DAC output range is 1..15V Actual Max DAC voltage (ie 10V, 5V, 6V) can be setup in the myCNC control software.

Schematic design of DAC output is shown below:

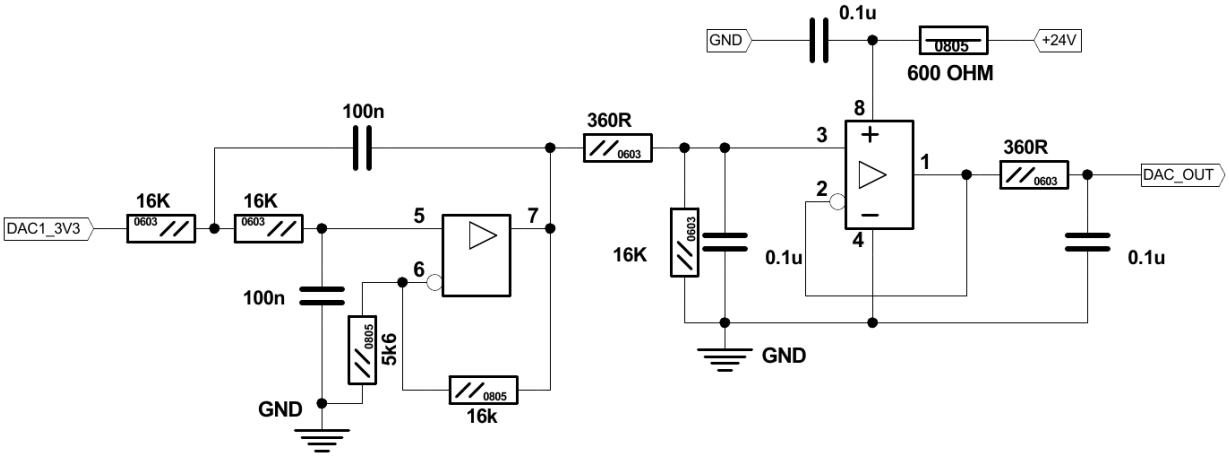

Connector pinout for DAC output:

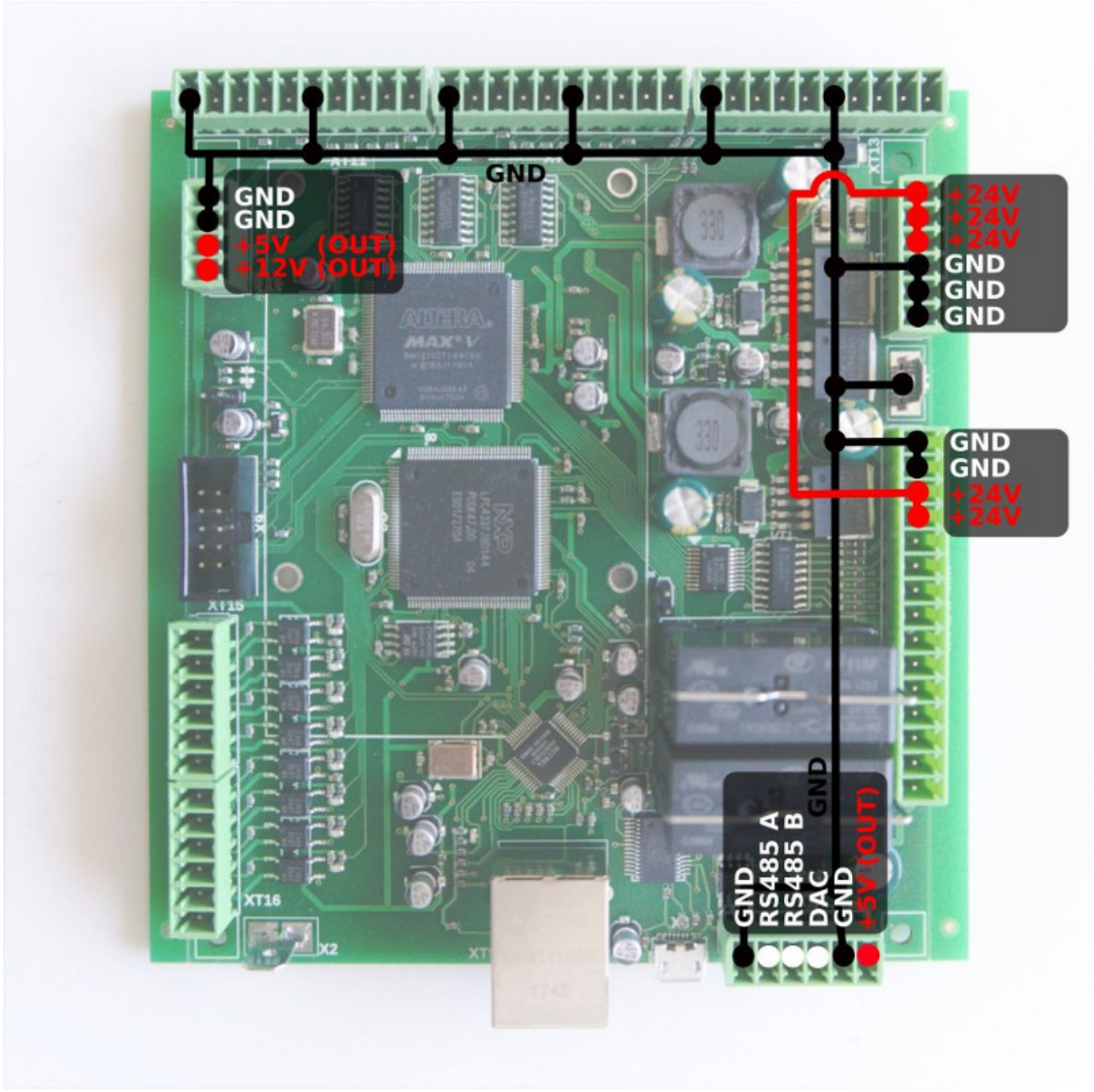

Connection Examples

3-wire NPN sensor connection example (external power supply)

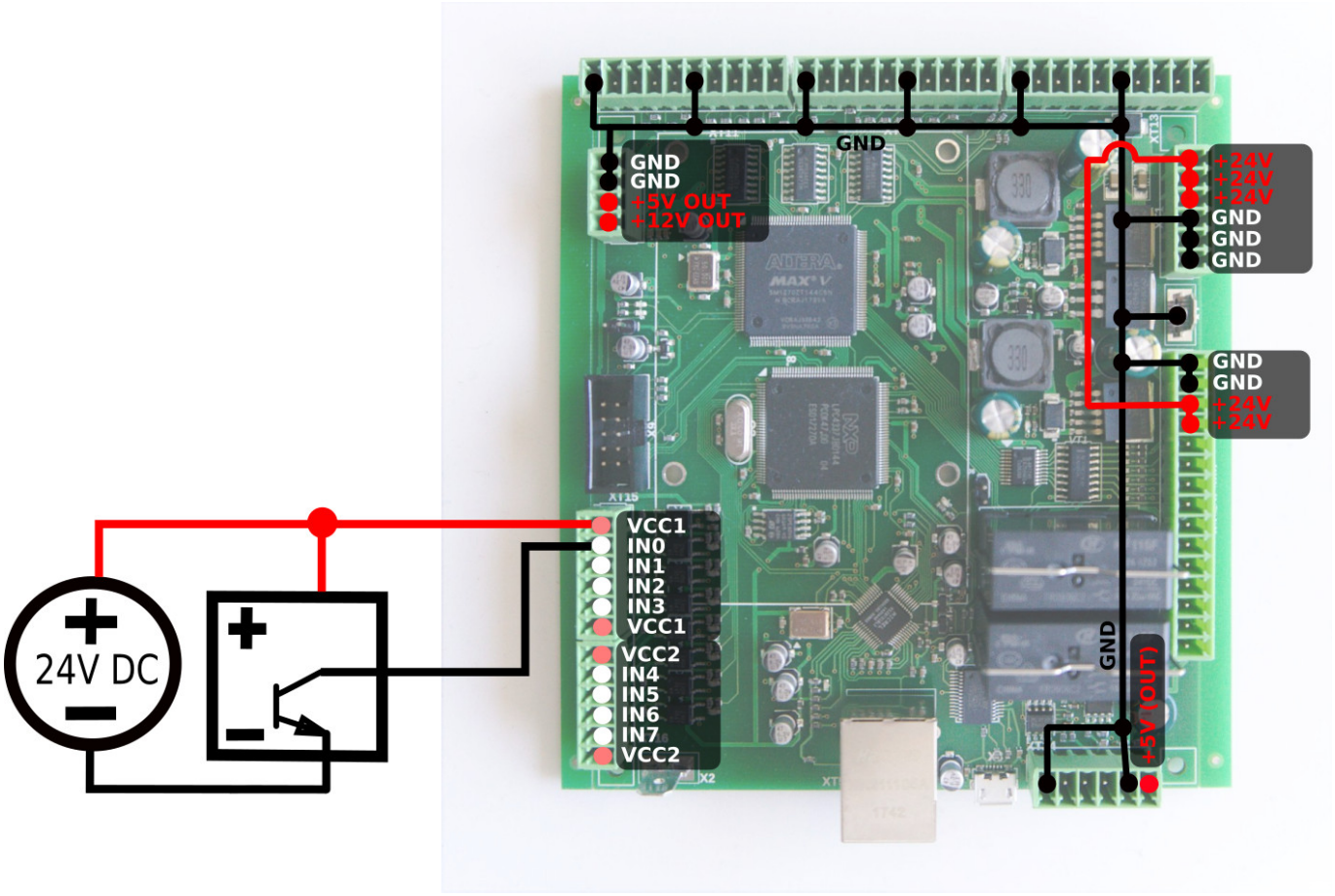

3-wire PNP sensor connection example (external power supply)

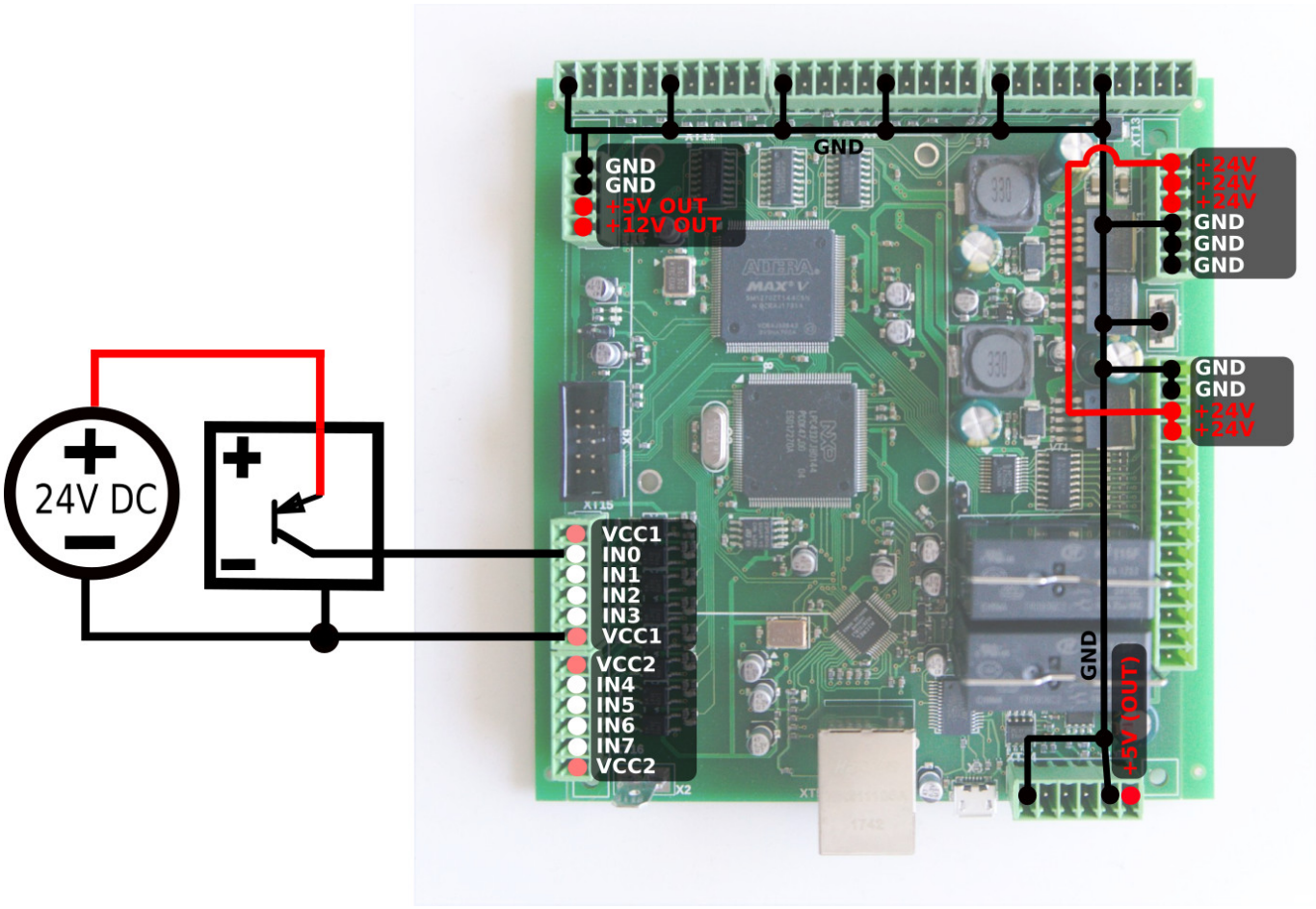

3-wire NPN sensor connection example (internal power supply)

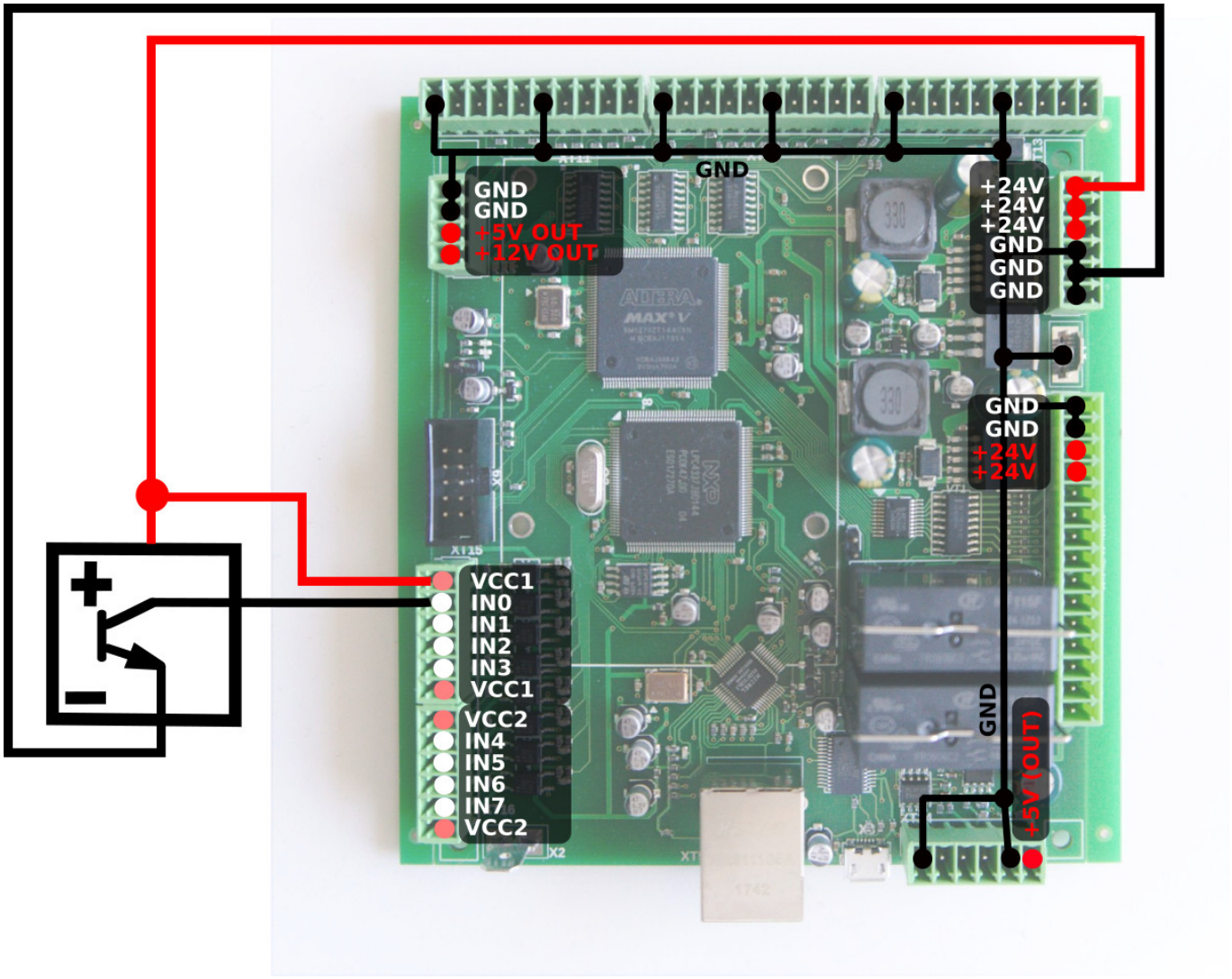

3-wire PNP sensor connection example (internal power supply)

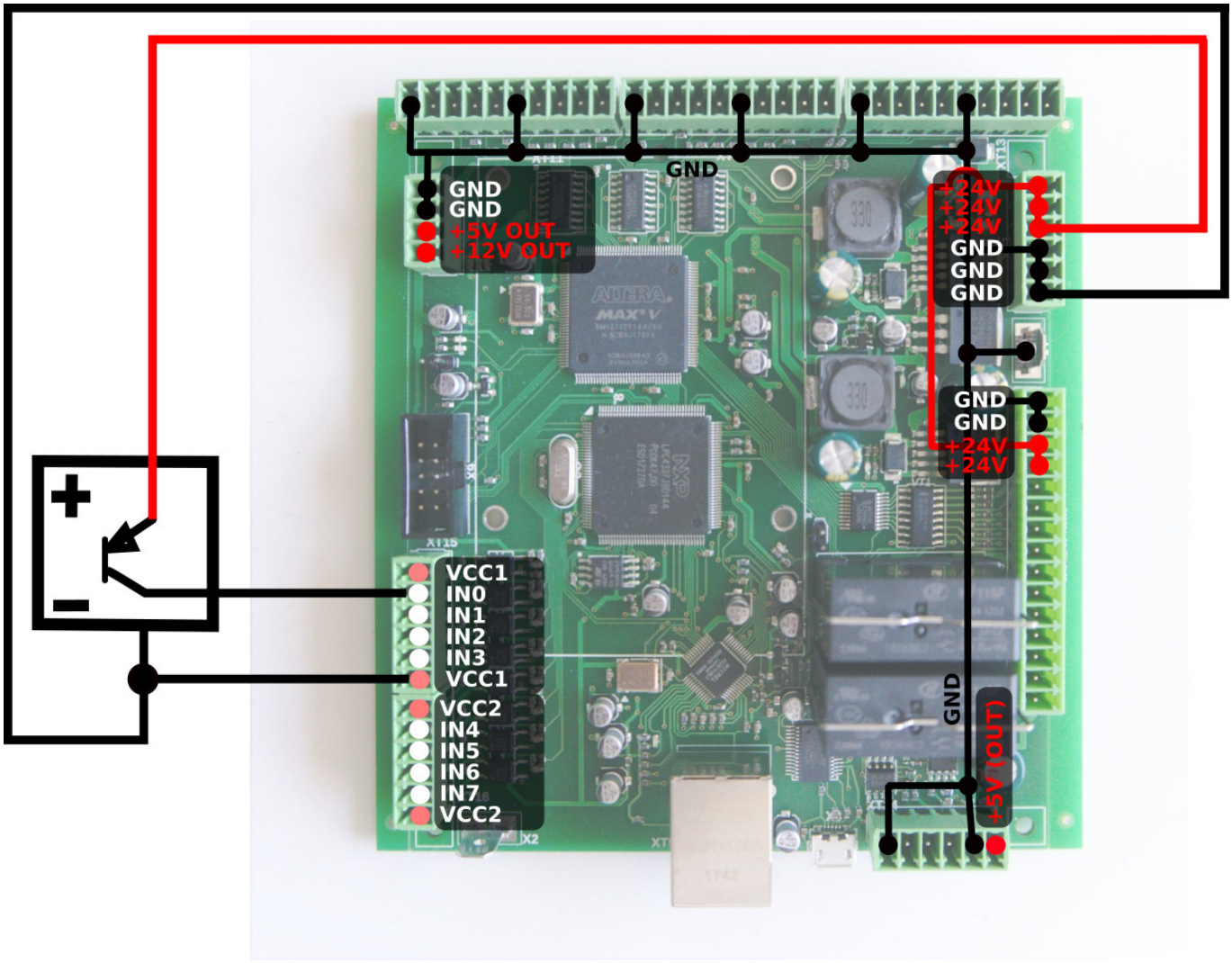


```
Depending on the particular sensor, power can be supplied through
any of the power input connections (5V, 12V, 24V).
24V was chosen in these examples as it is the industry standard.
```

Spindle speed control through DAC (0-10V)

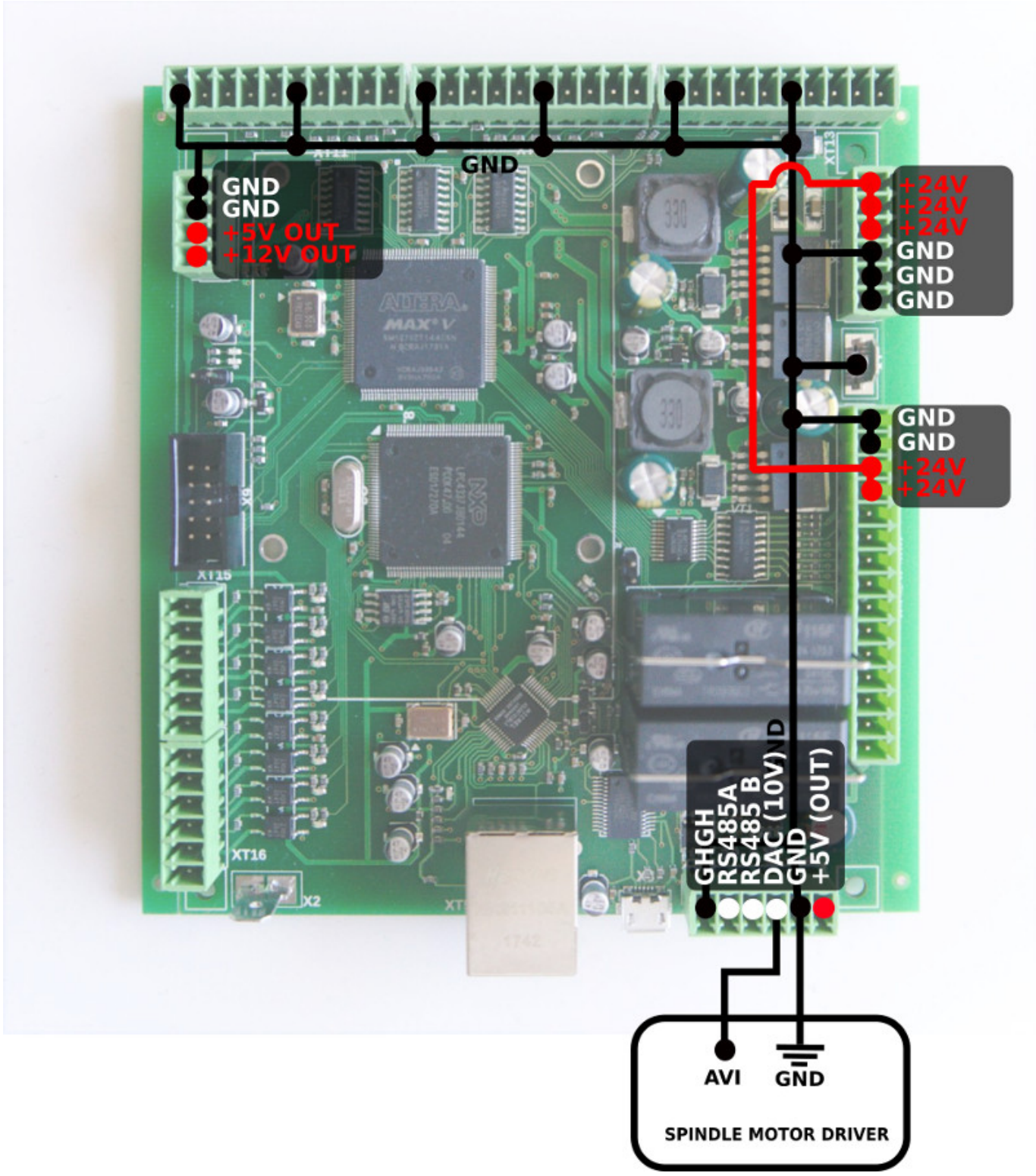

Switch connection example (external power supply)

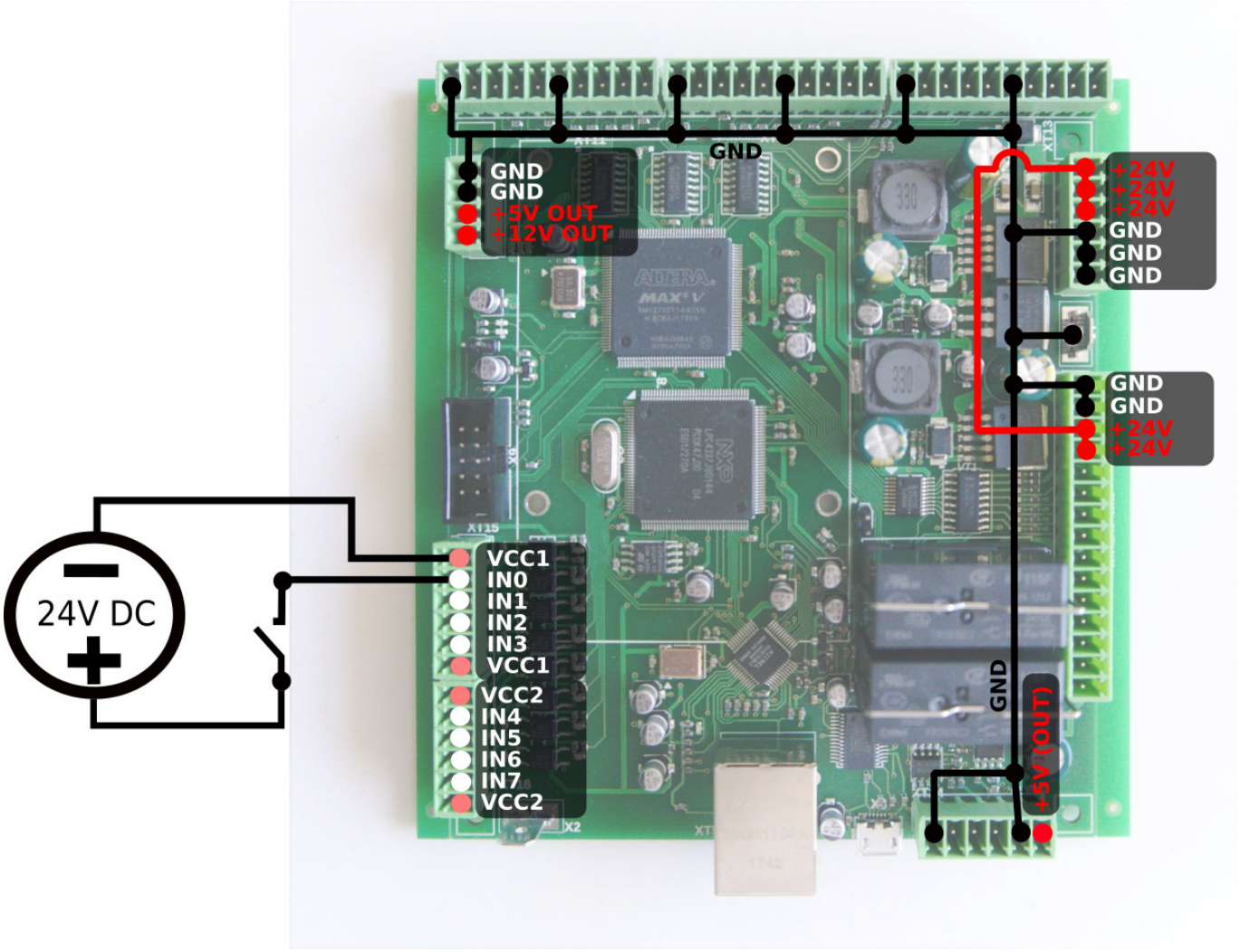
GND
GND
GND
+5V OUT
+12V OUT
+24V
+24V
+24V
GND
GND
GND
GND
GND
+24V
+24V
24V DC
VCC1
IN0
IN1
IN2
IN3
VCC1
VCC2
IN4
IN5
IN6
IN7
VCC2
GND
+5V (OUT)

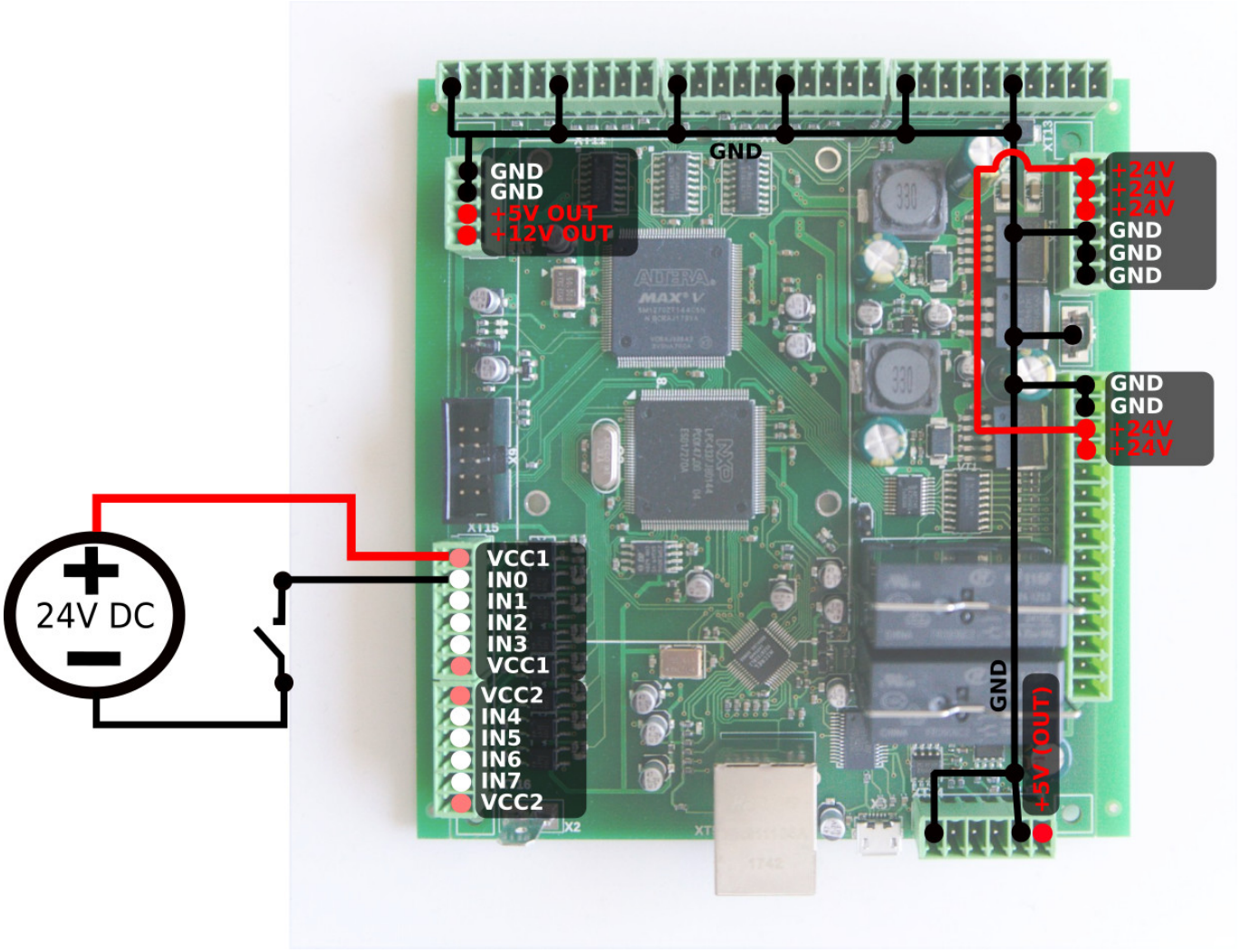

ET6 control board firmware reflash

WARNING: *Unlike updating the myCNC software, the firmware CANNOT be downgraded after a reflash. The myCNC team recommends reflashing the control board firmware as a last resort only, and recommends seeking an explicit confirmation from the support team that the firmware reflash is warranted in order to avoid issues.*

NOTE: *Make sure to select the firmware for the correct version/revision of your board! Firmware for ET6 boards R1-R3 and ET6 boards R4-R6 (also known as the ET8) are DIFFERENT. Flashing incorrect version of the firmware will result in a non-functional board. If you're unsure of your board version, please contact myCNC Technical Support prior to the reflash:*

ET6
ET6-R4/R5/R6 (ET8)

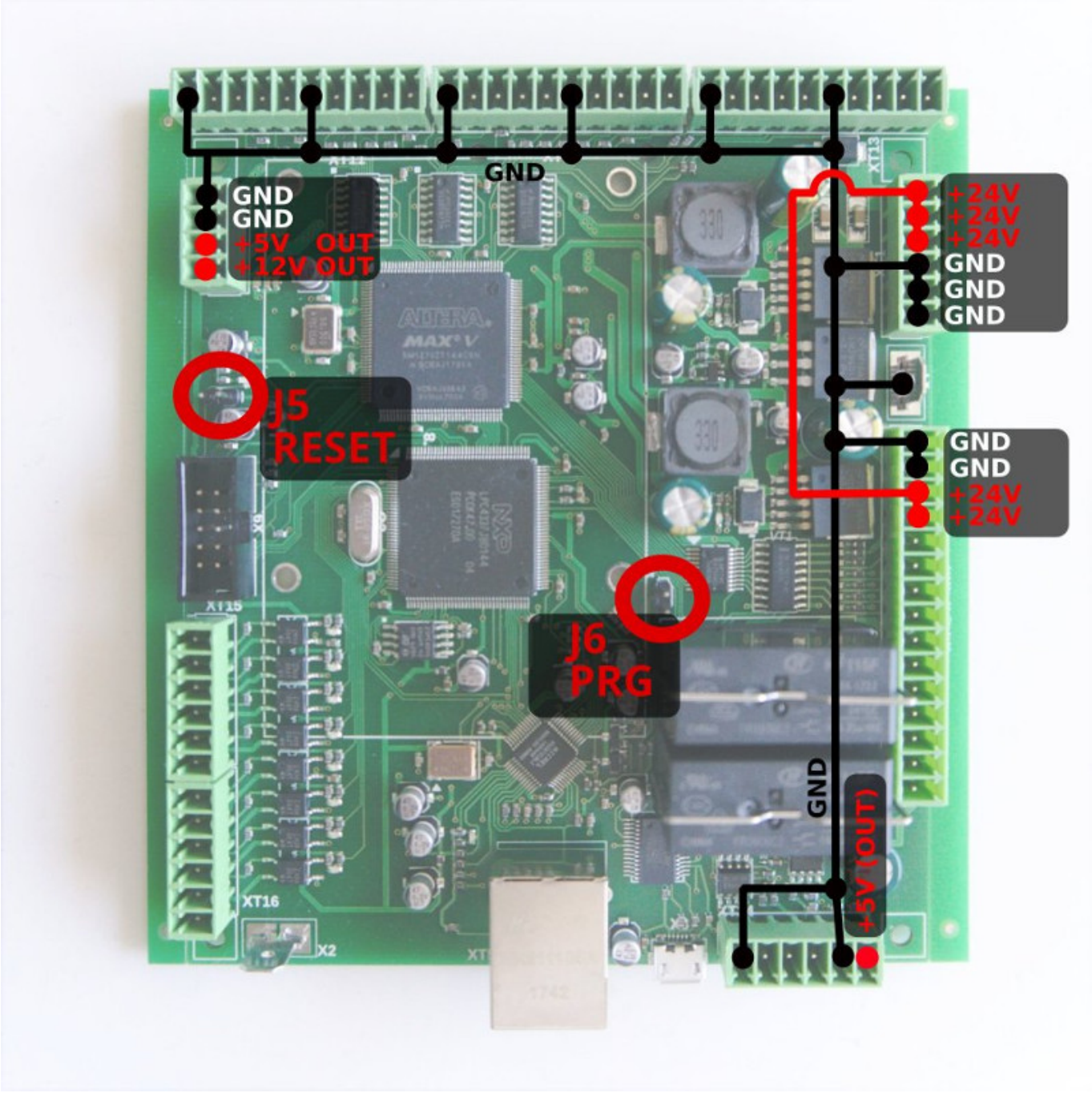

myCNC-ET6 reflashing procedure may take about 3 minutes.

To reflash the board

1. Plug 24V DC supply
2. Plugin micro-USB cable to ET6 & Host Computer with myCNC software installed
3. Close (short) jumpers J5(reset) & J6(programming) on myCNC control board
4. Open (remove) J5 jumper.
5. Open myCNC software on the Host computer,
    1. goto Configuration Tab → Support Tab
    2. Set “Select board” set to “myCNC-ET6”. Make sure to select the correct revision version.
    3. Select “Firmware version” from “Release”, “Night build” or “Testing”
    4. Set *UART port* to port with FT232 attached
    5. Set *Baud Rate* set to “115200” for ET6; other baud rate can be selected in case of problems on 115200 speed

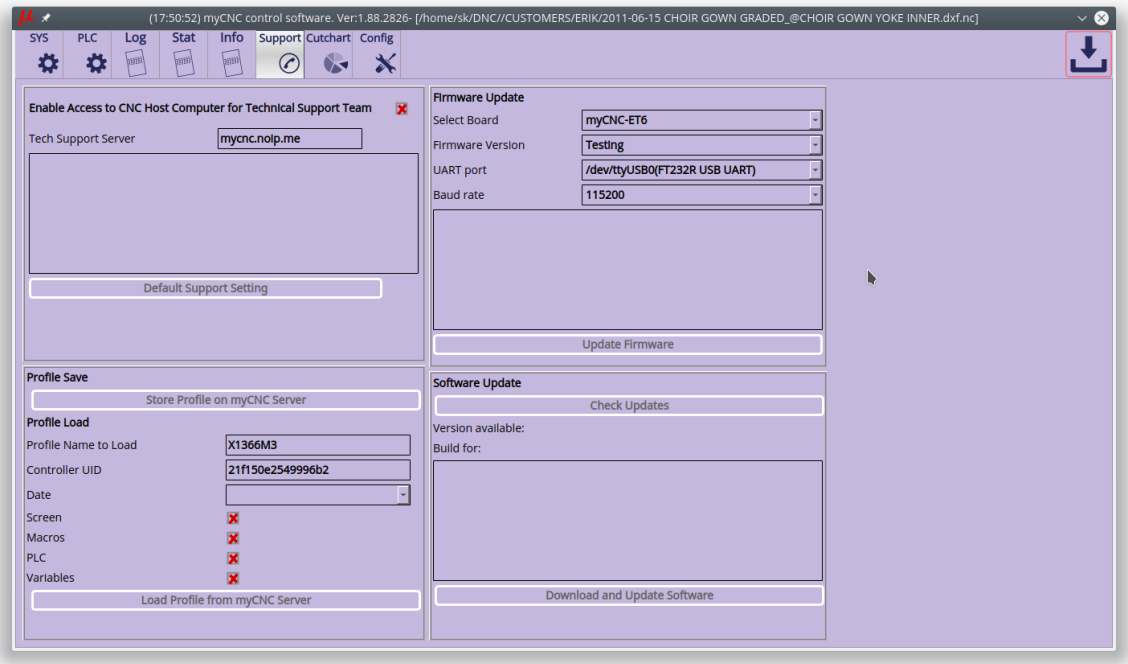

6. Press “Update Firmware” button, Firmware download and reflashing process will be started.

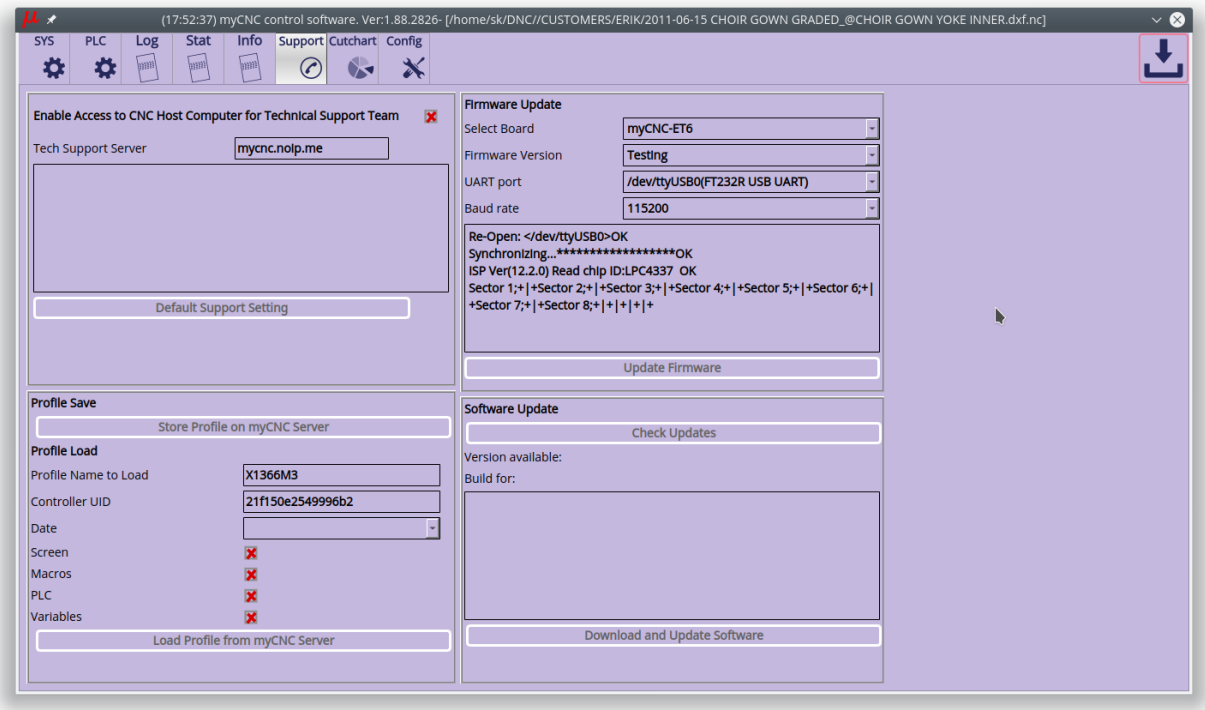

7. Sector 0 will be written at the end of process. After firmware process finished, a popup message will be shown.

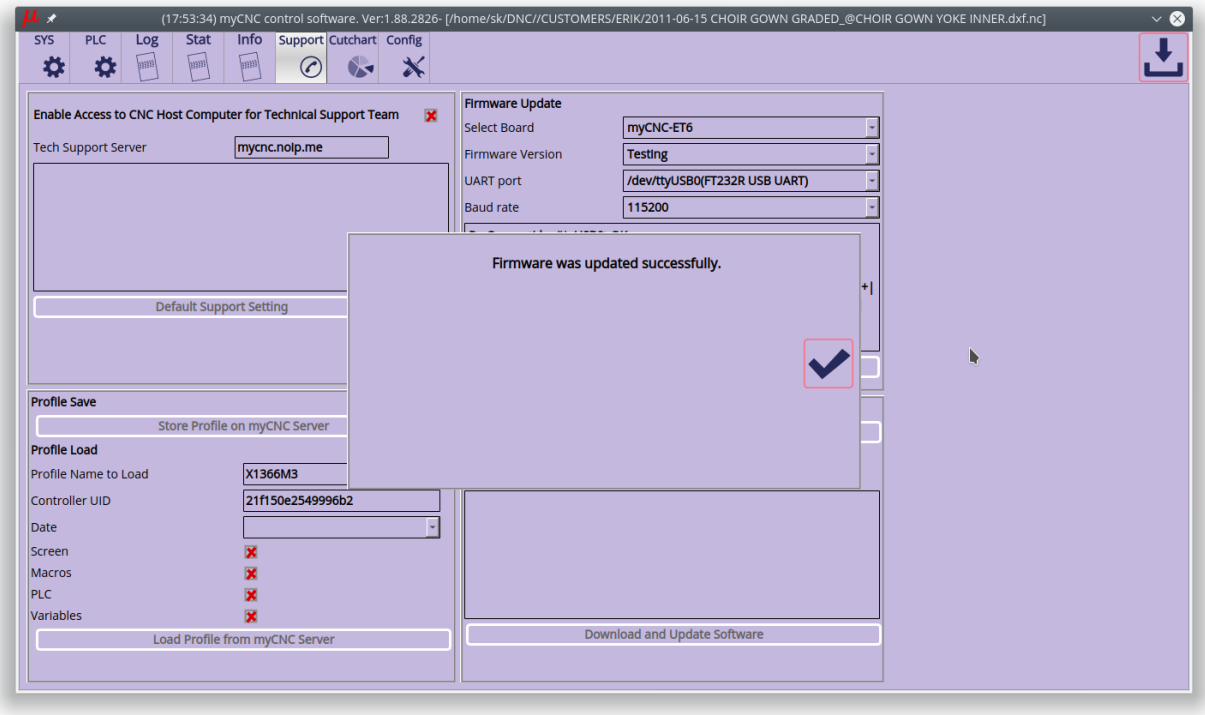

8. Remove all jumpers (J5, J6) and restart the board. To restart the board you need either repower ET6 or
close Reset jumper (J5) for 1 second, then release it. The board will be restarted.

In case reflashing process failed, you get a popup message.

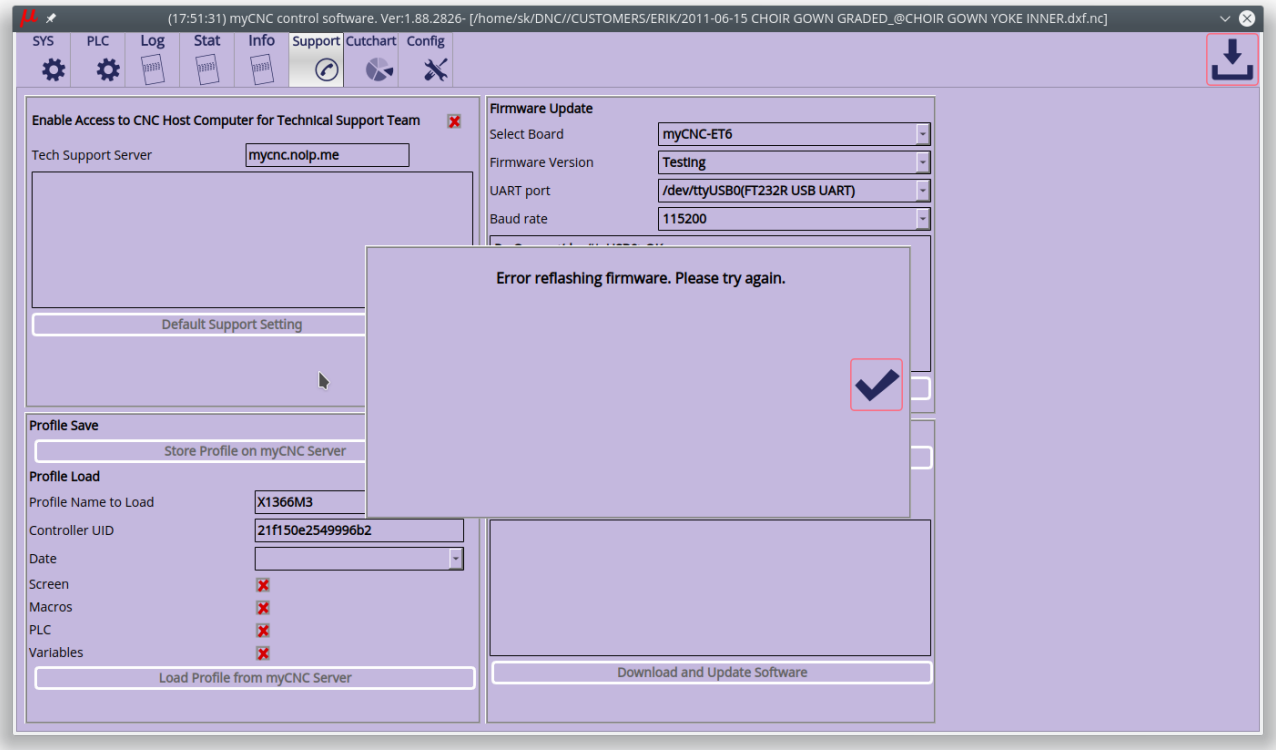

Please repeat procedure from #3

Board dimension

PDF : http://cnc42.com/downloads/et6-r4.pdf

DXF : http://cnc42.com/downloads/et6-r4.dxf

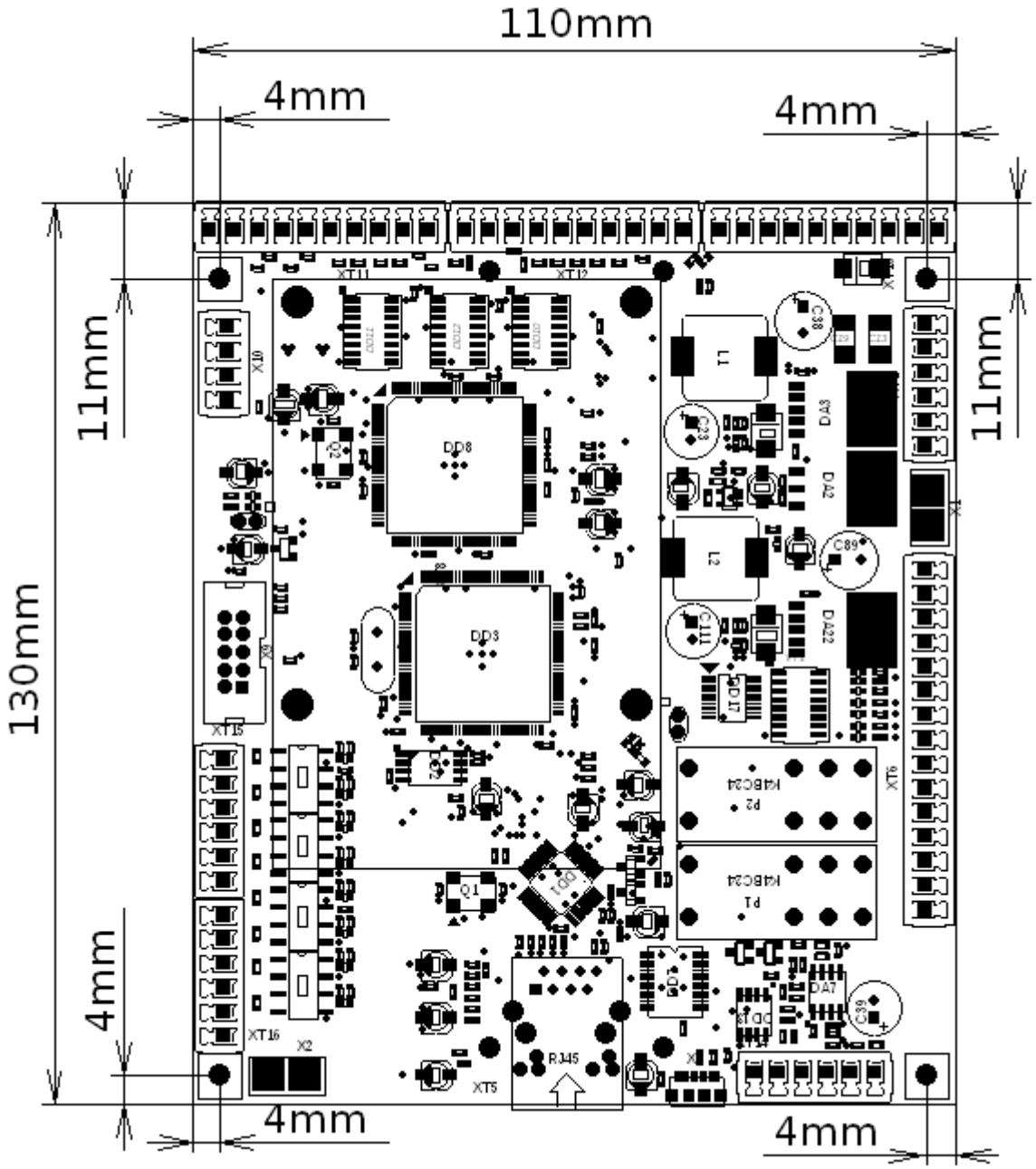

From:
http://cnc42.com/ - **myCNC Online Documentation**

Permanent link:
http://cnc42.com/mycnc/mycnc_et6

Last update: **2023/03/16 09:23**